3 601 L16 100
Issue / Stand 11-01-18

Fig./Abb. 1

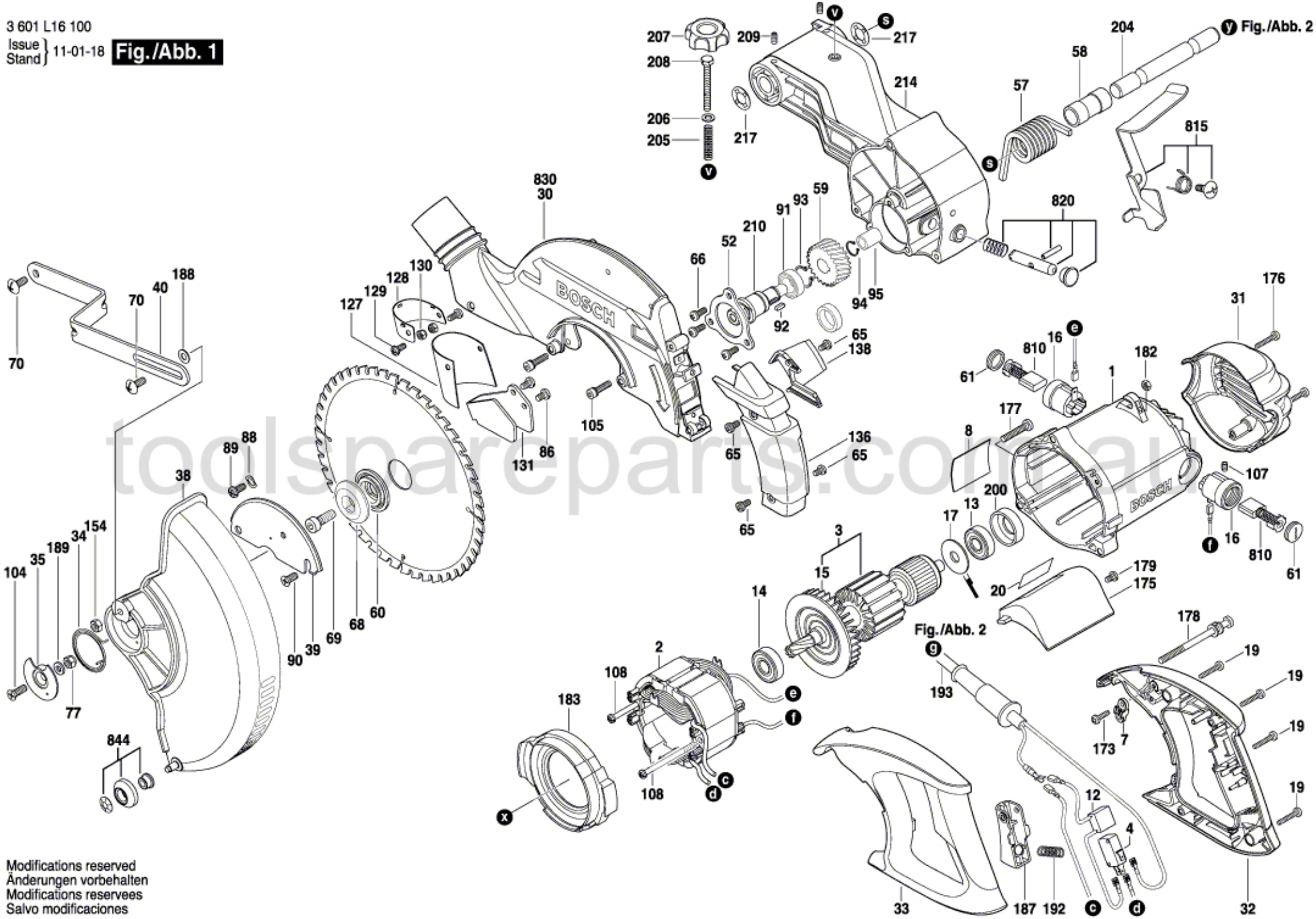

toolspareparts.com.au

Modifications reserved
Änderungen vorbehalten
Modifications reservees
Salvo modificaciones